T2_TBone Series Barebone / BTO System

order code: T2I0018

Wall mount Drawing

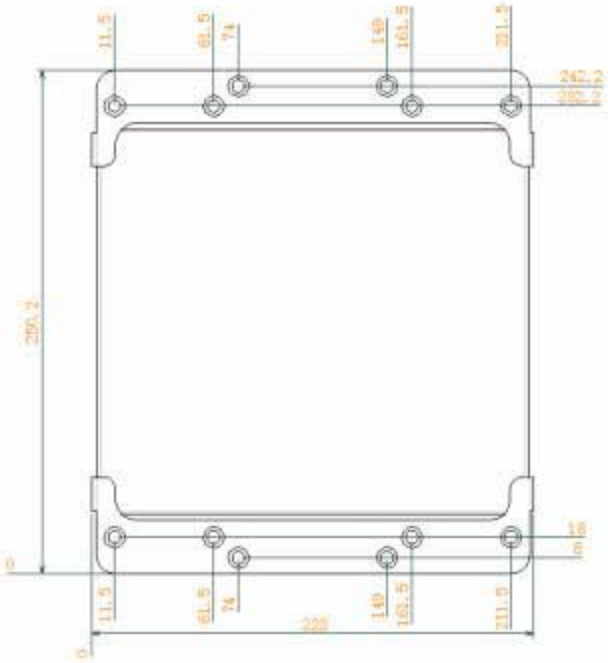

Specification

Model	T2I0018
System	Compact Mini ITX System, 4th Gen iCore Haswell platform
	Long Term Support, with flexible I/O Panel
Chassis	IT201 (T2 T-Bone) Stylish Black with optinal FAN, PWR / HDD Led 1* 2.5" Drive Bay
Mainboard	Kino-DH810-R10, Industrial Grade, H81 Chipset
CPU	i5-4570T 2Core/4Thread 2,8-3,6Ghz, HD4600 GfX 200Mhz, 4MB AMT9.0
Memory	4GB (2x2) DDR3L SODIMM 1600Mhzon 2* DIMM (16GB max)
Display	Intel® HD Graphics Gen 7.5 supports DX11.1 and OpenCL 1.2, OpenGL 3.2
	DVI-D (up to 2560x1600 @ 60 Hz)
	VGA (up to 1920x1200 @ 60 Hz)
Ethernet	Dual LAN: Intel® I211-AT PCIe controller
Audio	Realtek ALC662 HD audio codec
Super I/O	Fintek F81866
Rear I/O	2* RS232 DB9, VGA, DVI-D, 2* RJ45 GbE, 2* USB 2.0, 2* USB 3.0, Line IN/OUT
	Optinal via Cable: 1* Com Port RS232 or RS422/485
on Board	TPM, SMBUS (4pin), Digital I/O (2*5pin), PS/2, USB2.0 (2,0mm), 1* Mini PClex1 w/ mSATA
Watch Dog	Software programmable, support 1~255 sec. system reset
Power	4pin 12VDC via 84Watt AC/DC Adapter 90-230V AC
Dimension	W218 x D 200 x H 56 mm
Weight	2,05KG without Power Adapter / Mounting Kits

Packing List	1* T2I0018 ITX System, i5-4570T, 2x2GB RAM, 500GB SATA HDD
	AD84M4PP24 12V pin Power Adapter 90-230V AC, EU Power Cord
	Driver / Utility DVD, ONEKEY Recovery DVD
	2* Stand for Vertical Desktop use

Optional CPU	i7-4770T 4C/8T 2,5-3,7Ghz, HD4600 GfX 350Mhz, 8MB AMT9.0
	i3-4350T 2C/4T 3,1Ghz, HD4600 GfX 200Mhz, 4MB
Optional Parts	32200-000049-RS, 1* DB9 COM Port RS232
	32205-003800-300-RS 1* DB9 COM Port RS422/485
	T23WVK, Wall mount need 2 pcs / half Vesa mount only 1 pcs
	F2X410 2* 40mm FAN
	mSATA SDD (Colay with mPCIe port)
	Bluetooth, W-LAN, WIFI, 3G, 4G Modem, SIM, GPS via mPCIe Slot